Modular Floor Standing

IP-MFS1626060

STEEL | SINGLE DOOR | IP55

1620H x 600W x 600D

IP Enclosures MF1S Range of powder-coated galvanised steel Modular Free Standing Enclosures for low voltage switchgear and controlgear assembies are suitable for general industrial applications.

Protection: Complies with IP55 IK10. (Independent accredited test laboratory)

Standard: AS/EN/IEC62208, AS/EN/IEC60529 (Complying to AS/NZ 61439)

Material:
- Main Frame: 2.0mm Galvanised Steel W Profile System
- Side, Rear & Roof Panels: 1.2mm Powder-Coated Galvanised Steel Sheet
- Front Door: 2.0mm Powder-Coated Galvanised Steel Sheet
- Mounting Plates: 2.0mm Galvanised Steel Sheet
- Door Seal: EPDM

Main Frame: The robust modular main structure is fabricated using 2.0mm galvanised steel sheet W Profile system with 20mm hole pattern.

Door: The robust door is fabricated using 2.0mm powder-coated galvanised steel sheet and incorporates four concealed reversible hinges allowing left or right hand opening. The door is designed for a 135° opening. Each door contains integral cable management rails with 20mm hole pattern, M5 earth stud and provision for a document pocket.

Side, Rear and Roof Panels: Removable panels are fabricated using 1.2mm powder-coated galvanised steel sheet incorporating a smart bend design to provide additional strength.

Door Seal: High quality EPDM replaceable door seal.

Lock: 4 point locking system with key-lock swing handle.

Earthing: All panels are earthed to provide earthing continuity.

Surface Treatment: UL approved epoxy polyester powder-coated with a textured finish. 80-120 micron average thickness.
- Colour: RAL7035

(Other colours available upon request).

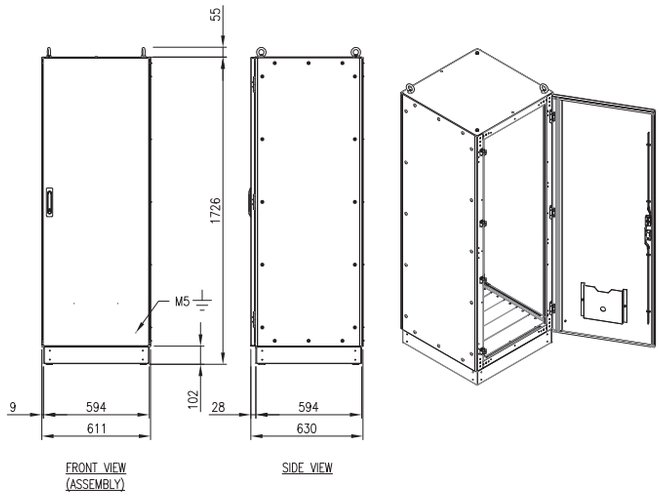

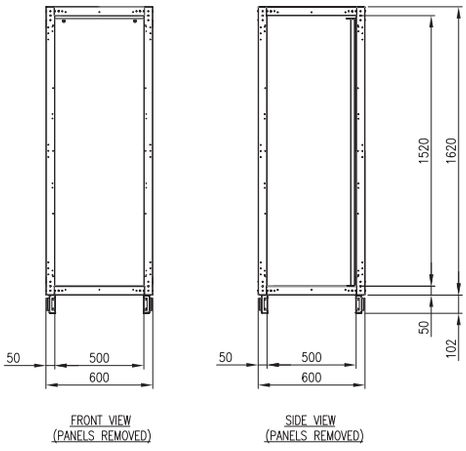

© IP Enclosures 2017