Modular Floor Standing IP-MFSS1868080

316 STAINLESS STEEL | SINGLE DOOR | IP55 1860H x 800W x 800D

IP Enclosures MF1SS Range of grade 316 stainless steel Modular Free Standing Enclosures for low voltage switchgear and controlgear assembies are suitable for general industrial applications.

Protection: Complies with IP55.
(Independent accredited test laboratory) CE

Standard: AS/EN/IEC62208, AS/EN/IEC60529
(Complying to AS/NZ 61439)

Material:
- Main Frame: 2.0mm Grade 316/316L Stainless Steel W Profile System
- Covers: 1.2mm Grade 316/316L Stainless Steel
- Front Door: 2.0mm Grade 316/316L Stainless Steel
- Mounting Plates: 2.0mm Galvanised Steel Sheet
- Door Seal: EPDM

Surface Finish: 0.4 micron Ra surface brushed finish

Main Frame: The robust modular main structure is fabricated using 2.0mm grade 316 stainless steel W Profile system with 20mm hole pattern.

Door: The robust door is fabricated using 2.0mm grade 316 stainless steel and incorporates four concealed reversible hinges allowing left or right hand opening. The door is designed for a 135° opening. Each door contains integral cable management rails with 20mm hole pattern, M5 earth stud and provision for a document pocket.

Side, Rear and Roof Panels: Removable panels are fabricated using 1.2mm grade 316 stainless steel sheet incorporating a smart bend design to provide additional strength.

Door Seal: High quality EPDM replaceable door seal.

Lock: 4 point locking system with key-lock swing handle.

Earthing: All panels are earthed to provide earthing continuity.

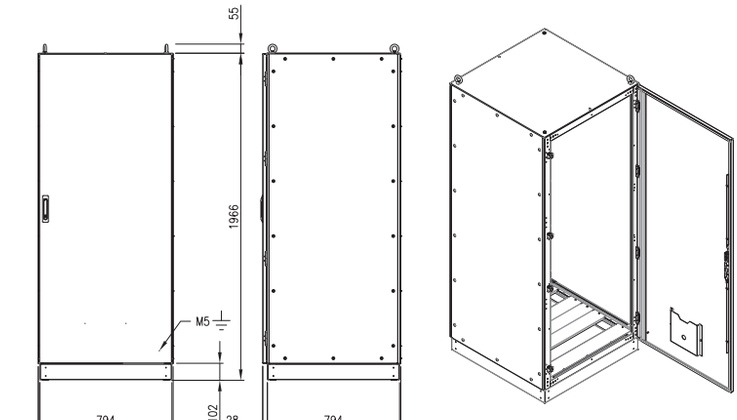

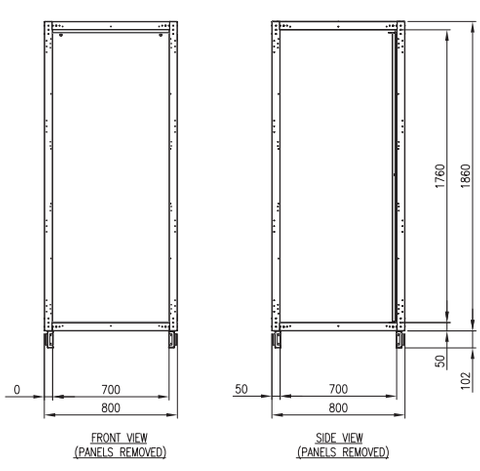

© IP Enclosures 2017